THIS DRAWING IS UNPUBLISHED. RELEASED FOR PUBLICATION JAN ,2006.
© COPYRIGHT 2006 BY TYCO ELECTRONICS CORPORATION. ALL RIGHTS RESERVED.

LOC	DIST
E	B

REVISIONS

P	LTR	DESCRIPTION	DATE	DWN	APVD
	C	ECR-05-017969	12JAN06	JMS	FWK

NOTES:

1. PACK IN ACCORDANCE WITH AMP SPEC 107-3275
2. 100 TRAY PACK IN ACCORDANCE WITH AMP SPEC 107-3275
3. Au PLATING

4 ELECTRICAL CHARACTERISTICS

FREQUENCY RANGE:	DC – 10 GHz
NOMINAL IMPEDANCE:	50 Ohm
INSULATION RESISTANCE:	1000 MOhm
WORKING VOLTAGE:	250 Volts RMS at Sea Level
DIELECTRIC WITHSTAND VOLTAGE:	750 Volts RMS Max
CONTACT RESISTANCE:	
CENTRE CONTACT:	6.00 mOhm Max
OUTER CONTACT:	1.00 mOhm Max

5 MECHANICAL CHARACTERISTICS

MOUNT NUT RECOMMENDED TORQUE:	0.75N
DURABILITY:	500 Cycles Min

6 ENVIRONMENTAL CHARACTERISTICS

OPERATING TEMPERATURE:	–65 to +165 DegC

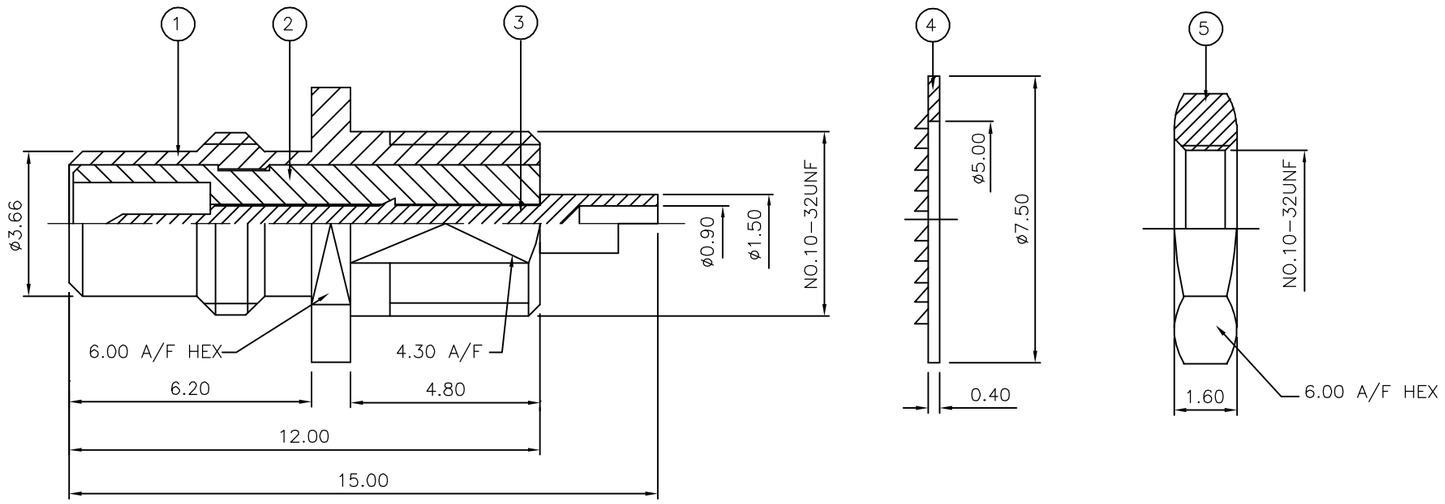

QUANTITY PER ASSY				MATERIAL	DESCRIPTION	ITEM
		1	1	BRASS (3)	HEX NUT	5
		1	1	BRASS (3)	LOCKWASHER	4
		1	1	BRASS (3)	CONTACT	3
		1	1	PTFE	INSULATION	2
		1	1	BRASS (3)	BODY	1
		6--0	1--0			
		(2)	(1)			

PARTS LIST

THIS DRAWING IS A CONTROLLED DOCUMENT.

DIMENSIONS: mm

TOLERANCES UNLESS OTHERWISE SPECIFIED:
0 PLC ± –
1 PLC ± –
2 PLC ± –
3 PLC ± –
4 PLC ± –
ANGLES ± –

MATERIAL: SEE TABLE

FINISH: –

DWN J.SANDWELL 12JAN06
CHK S.PARLOW 12JAN06
APVD F.WHEELER-KING 12JAN06
PRODUCT SPEC –
APPLICATION SPEC –
WEIGHT –

tyco Electronics
Tyco Electronics Corporation
Bideford EX39 4HE

NAME
SMC BULKHEAD SOCKET FRONT MOUNT 50 OHM
–
–

SIZE	CAGE CODE	DRAWING NO	RESTRICTED TO
A3	00779	C-1337484	–

CUSTOMER DRAWING

SCALE	SHEET	REV
NTS	1 OF 1	C